PC/HD to DVI Format Converter

Operation Manual

CP-261D

The PC/HD to DVI-I format conveter converts analog PC RGBHV/YPbPr signal to digital DVI signal.

It allows you to connect the analog HD-15 RGBHV/YPbPr output from your PC or Video equipments to the DVI input of the monitors or projectors.

Its high bandwidth capability supports a wide range of PC and HDTV resolutions.

This package includes

- One CP-261D unit.
- One switching power supply adaptor.
- One HD-15 VGA to 3 RCA cable.
- User manual.

Features:

* It enables you to connect computers with analog PC output or DVDs with analog HD output to digital DVI-I monitors or projectors.
* You can select input between analog RGB and YPbPr.
* You can also select output between Bypass or digital RGB.
* Supports up to 1600 x 1200 @ 60 Hz for PC input and 1920 x 1080p @ 60 Hz for HD input.
* Supports DDWG standard for DVI complaint monitors.

Operation Controls and Functions

Front Panel

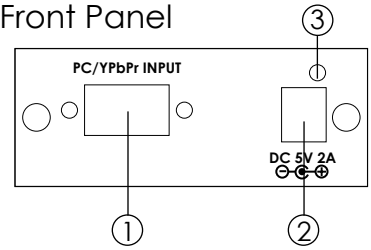

Rear Panel

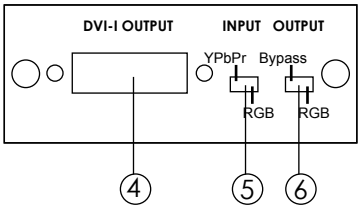

1. HD-15 D-Sub input: Connects to the PC or YPbPr output of your PC or YPbPr source equipment, using VGA cable, or D-Sub to 3 RCA adaptor cable.
2. DC 5V power input jack.
3. Power LED light.
4. DVI-I output: Connects to the DVI input of your display TV through DVI cable.
5. Input format switch:
   - Set the switch to YPbPr when the output format of your source equipment is component YPbPr. Use VGA to 3 RCA adaptor cable to connect between your source equipment and the CP-261D.
   - Set the switch to RGB when the output format of your source equipment is RGBHV. Use- HD-15 D-Sub VGA cable to connect between your source equipment and the CP-261D.

Operation Controls and Functions

6. Output format switch:
   When the input is YPbPr set the switch to bypass for digital YPbPr out, set the switch to RGB for digital RGB out.
   When the input is RGB, set the switch to either position for the digital RGB out. There is no YPbPr out for RGB input.

Input SW. / Output SW. / Output	Input	
	YPbPr	RGB
Bypass	Digital YPbPr	Digital RGB
RGB	Digital RGB	Digital RGB

Specifications

* Input: Analog HD-15 (RGBHV or YPbPr)
* Input signal:
  RGB: 0.7 Vp-p 75 ohm
  H + V: 3 to 5 Vp-p
  or Y :1 Vp-p 75 ohm,
  Pb/Pr: 0.7 Vp-p, 75 ohm
* Output: DVI-I connector
* Output signal: Digital RGB or YPbPr data bistream
* Compliant with DVI Rev 1.0
* Operation frequency: up to 165MHz
* Input/ Output resolution:
  PC：VGA@60、VGA@72、VGA@75、VGA@85、 SVGA@60、SVGA@72、SVGA@75、SVGA@85、XGA@60、XGA@70、XGA@75、XGA@85
  SXGA@60、SXGA@75、SXGA@85、UXGA@60
  1152@70、1152@75、1152@85
  HD/RGB：480i@60、576i@50、480p@60、576p@50、720p@60、720p@50、1080i@60、1080i@50、1080p@60、1080p@50、1080p@30、1080p@25、1080p@24
* Dimension (WxHxD)：76 * 30 * 105mm
* Power：5V 500mA~2A Center-positive

DVI-I Pin Configuration

DVI-Integrated(DVI-I): Supports both analog and digital connections to the display. This 29-pin connector can carry single or dual-link all-digital video/data signals on 24 pins and uses 5 pins to carry analog video/data signals and ground.

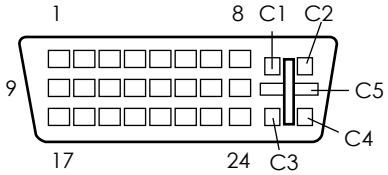

Combined Analog and Digital Connector Pin Assignments					
Pin	**Signal Assignment**	**Pin**	**Signal Assignment**	**Pin**	**Signal Assignment**
1	T.M.D.S Data2-	9	T.M.D.S Data1-	17	T.M.D.S Data0-
2	T.M.D.S. Data2+	10	T.M.D.S. Data1+	18	T.M.D.S. Data0+
3	T.M.D.S. Data2/4 Shield	11	T.M.D.S. Data1/3 Shield	19	T.M.D.S. Data0/5 Shield
4	T.M.D.S. Data4-	12	T.M.D.S. Data3-	20	T.M.D.S. Data5-
5	T.M.D.S. Data4+	13	T.M.D.S. Data3+	21	T.M.D.S. Data5+
6	DDC Clock	14	+5V Power	22	T.M.D.S. Clock Shield
7	DDC Data	15	Ground (Return for +5V, Hsync, and Vsync)	23	T.M.D.S. Clock+
8	Analog Vertical Sync	16	Hot Plug Detect	24	T.M.D.S. Clock-
C1	Analog Red	C2	Analog Green	C3	Analog Blue
C4	Analog Horizontal Sync	C5	Analog Ground(Analog R,G,&B return)		
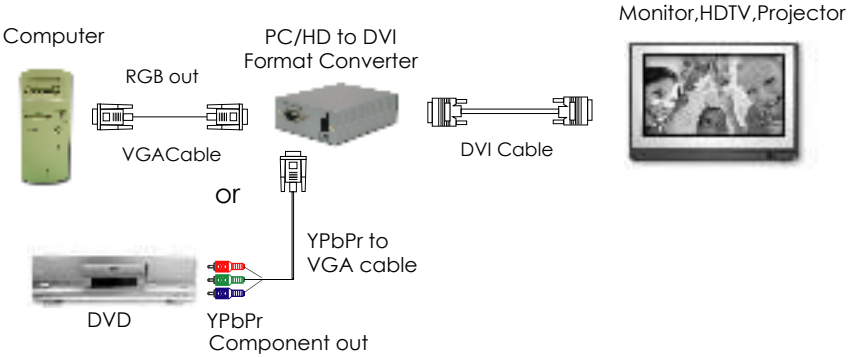
Connection and Installation